RADIALL® MULTICONTACT CONNECTORS	TECHNICAL DATA SHEET	620 340	
Series NSX	SIZE 12 CRIMP REMOVABLE SOCKET CONTACT	Issue: 12 APRIL 96	Page 1 / 1

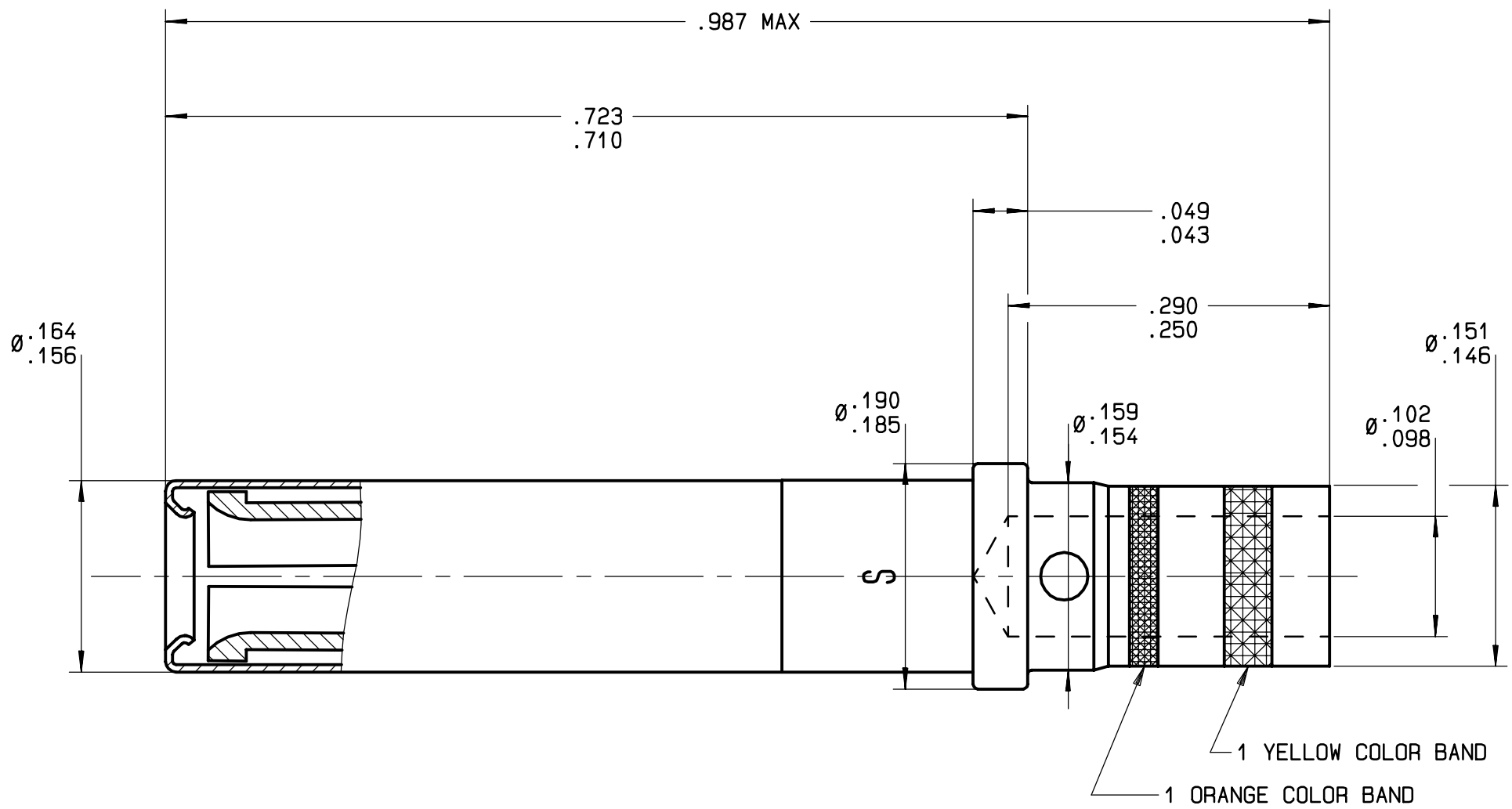

MATERIAL AND FINISH :
BODY CONTACT : COPPER ALLOY - GOLD OVER NICKEL
PROTECTIVE SLEEVE : STAINLEES STEEL

WIRES ACCOMODATED : AWG 12-14-16
INSULATION DIAMETER : .135 MAX
STRIP LENGTH : .236

TOOLING
CRIMPING TOOL : M22520/1-01 RADIALL 282 291
SELECTOR POSITION : 8 FOR AWG 12
7 FOR AWG 14
6 FOR AWG 16
POSITIONER : M22520/1-02 RADIALL 282 972
INSERTION AND EXTRACTION TOOL : M81969/28-02 RADIALL 282 547

CREATION				
PEN: .				
NOM: L FALETTI				
DATE: 26 APR 83	12 APR 96	REDRAWN	VALGRESY	.
APPR.:	Issue	Revisions	Name	Approved

This information is given as an indication.In the continual goal to improve our products,we reserve the right to make any modifications judged necessary.